SUBMITTAL
SURE • CLAMP™
(PATENTED)

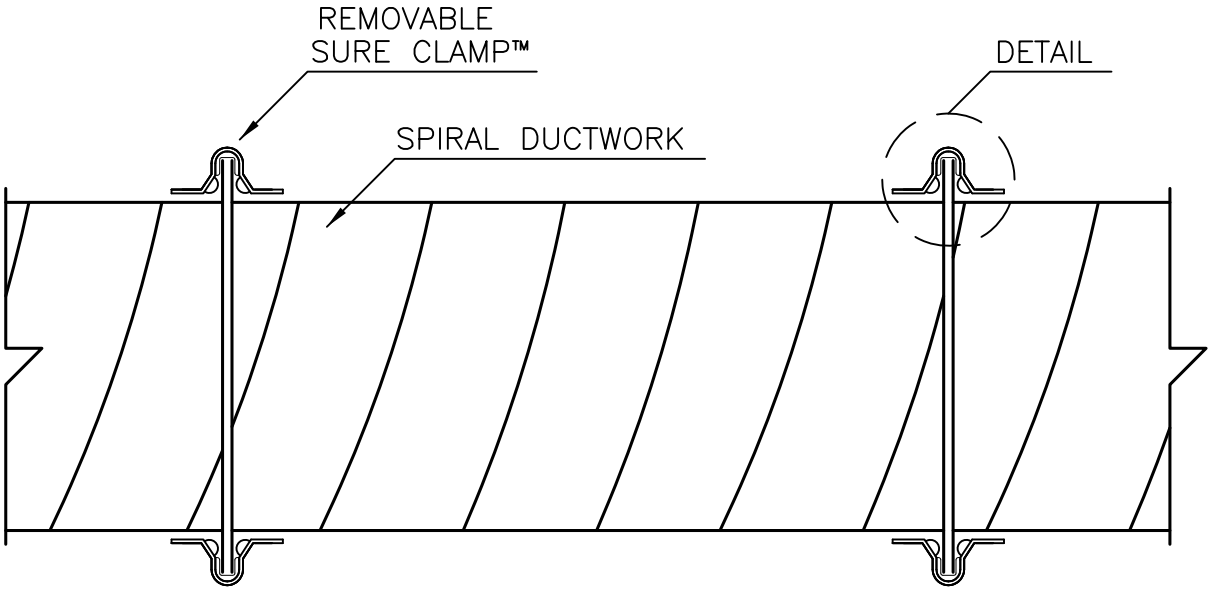

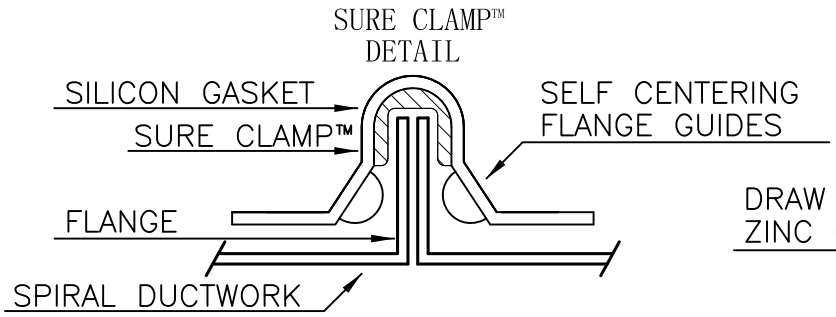

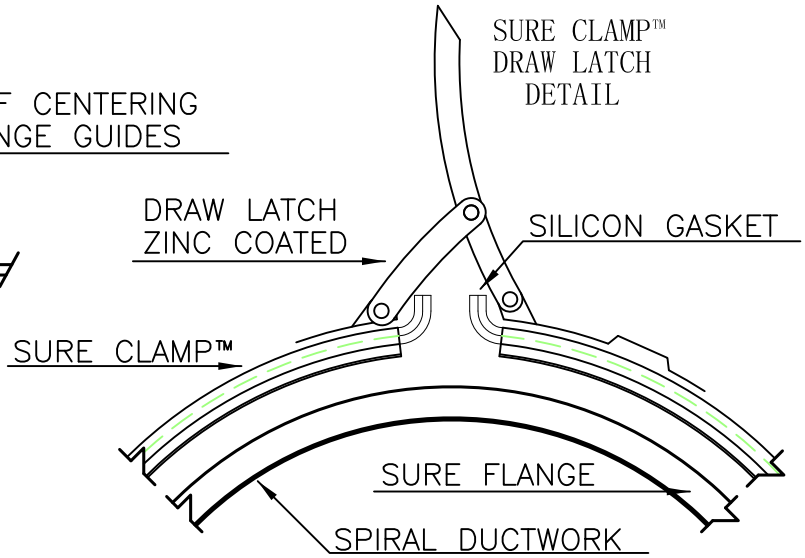

CONTINUOUS WELDED
CONTINUOUS WELDED SURE CLAMP DUCTWORK IS AVAILABLE ON REQUEST 18–16–14 GAUGE

GALVANIZED SPIRAL & FITTING GAUGE CHART
UNREINFORCED

NEGATIVE PRESSURE TO 20" W.G.		
DIAMETER	FITTING	SPIRAL
4"–12"	22 GAUGE	22 GAUGE
13"–22"	20 GAUGE	20 GAUGE

STAINLESS STEEL SPIRAL & FITTING GAUGE CHART
REINFORCE PER SMACNA STANDARDS

NEGATIVE PRESSURE TO 10" W.G.		
DIAMETER	FITTING	SPIRAL
4"–12"	24 GAUGE	24 GAUGE
13"–22"	22 GAUGE	22 GAUGE

www.langdonsheetmetal.com

Cincinnati, Ohio. 45215

The above mentioned product, is protected by patents and trade marks
All Rights Reserved updated 2/15/13

SUBMITTAL
GALVANIZED SURE • CLAMP
(PATENTED)

SURE CLAMP

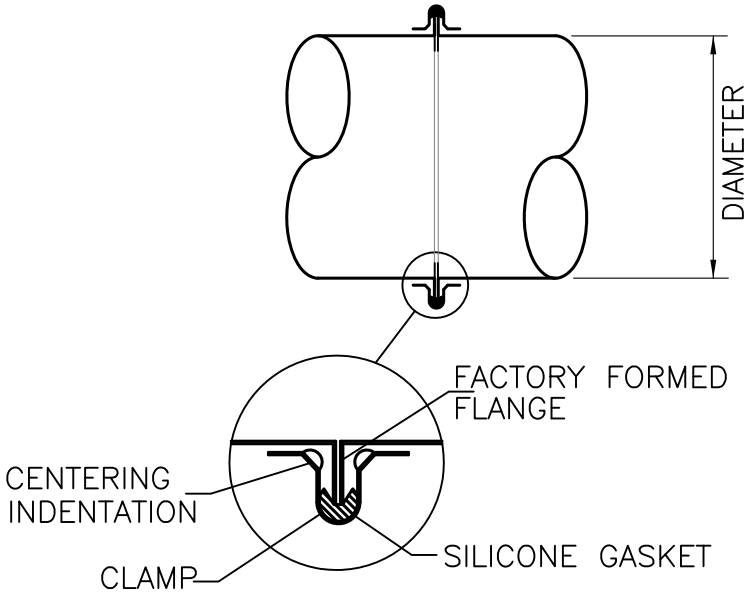

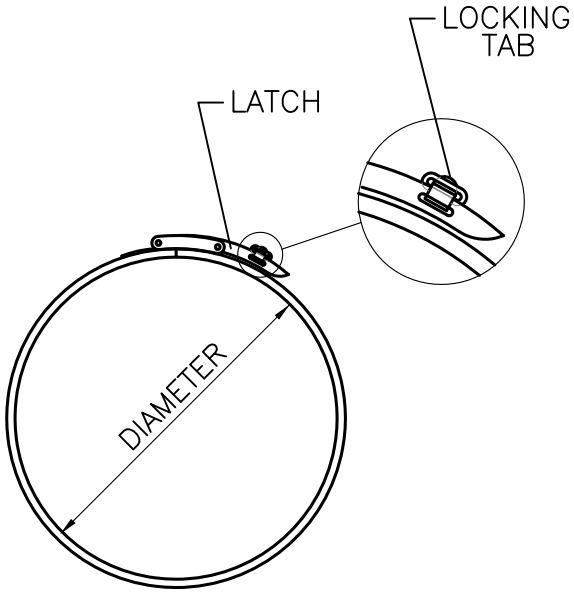

SYSTEM NUMBER/AREA : _____

MATERIAL TYPE : GALVANIZED

FABRICATE IN ACCORDANCE WITH LANGDON'S DUCT CONSTRUCTION STANDARDS

ZINC COATED LATCHES ARE PROVIDED FOR GALVANIZED CLAMPS.

INSTALL LOCKING TABS TO SECURE SURE CLAMP HANDLE

STANDARD SIZES 4"ø THRU 22"ø

QTY.	DIAMETER

www.langdonsheetmetal.com

Langdon, Inc. 9865 Wayne Avenue. Cincinnati, Ohio. 45215 Ph. 513-733-5955 Fax. 513-733-8050

The above mentioned product, is protected by patents and trade marks
copyright 2008 All Rights Reserved updated 12/17/12

SUBMITTAL
SURE • CLAMP 16 GA. GALVANIZED FITTINGS
(PATENTED)

#52 ELBOWS

*SPECIFY
CUSTOM DEGREE
&
CENTERLINE RADIUS

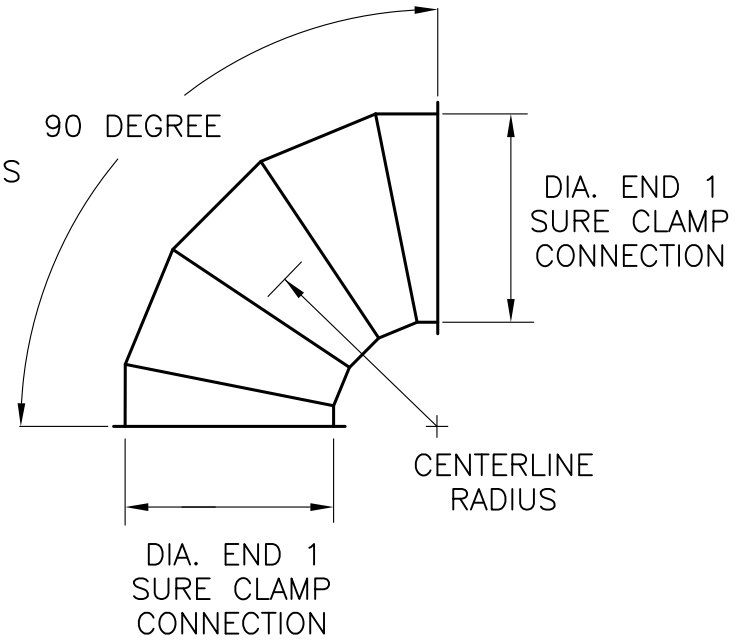

SYSTEM NUMBER/AREA : _____

MATERIAL : 16 GA. GALVANIZED

FABRICATE IN ACCORDANCE WITH
LANGDON'S DUCT CONSTRUCTION STANDARDS

TRANSVERSE JOINT
SURE CLAMP

LONGITUDINAL/TRANSVERSE SEAMS
ANSI/AWS D9.1–90 MIG WELDED (GMAW)

RL–4

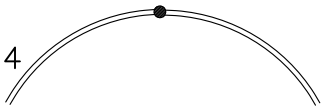

CENTERLINE RADIUS
1.5 X DIAMETER

GORE AMOUNT
0–22 DEG. = 2 GORE
23–45 DEG. = 3 GORE
46–60 DEG. = 4 GORE
61–90 DEG. = 5 GORE

STANDARD SIZES 4"ø THRU 22"ø

TAG	QTY.	DEGREE	DIA END 1

www.langdonsheetmetal.com

Langdon, Inc. 9865 Wayne Avenue. Cincinnati, Ohio. 45215 Ph. 513–733–5955 Fax. 513–733–8050

The above mentioned product, is protected by patents and trade marks
copyright 2008 All Rights Reserved updated 12/17/12

SUBMITTAL
SURE • CLAMP 16 GA. GALVANIZED FITTINGS
(PATENTED)

ELBOW FLATBACK

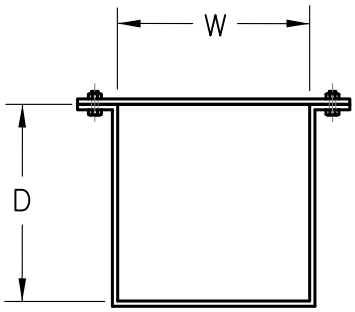

SECTION A–A

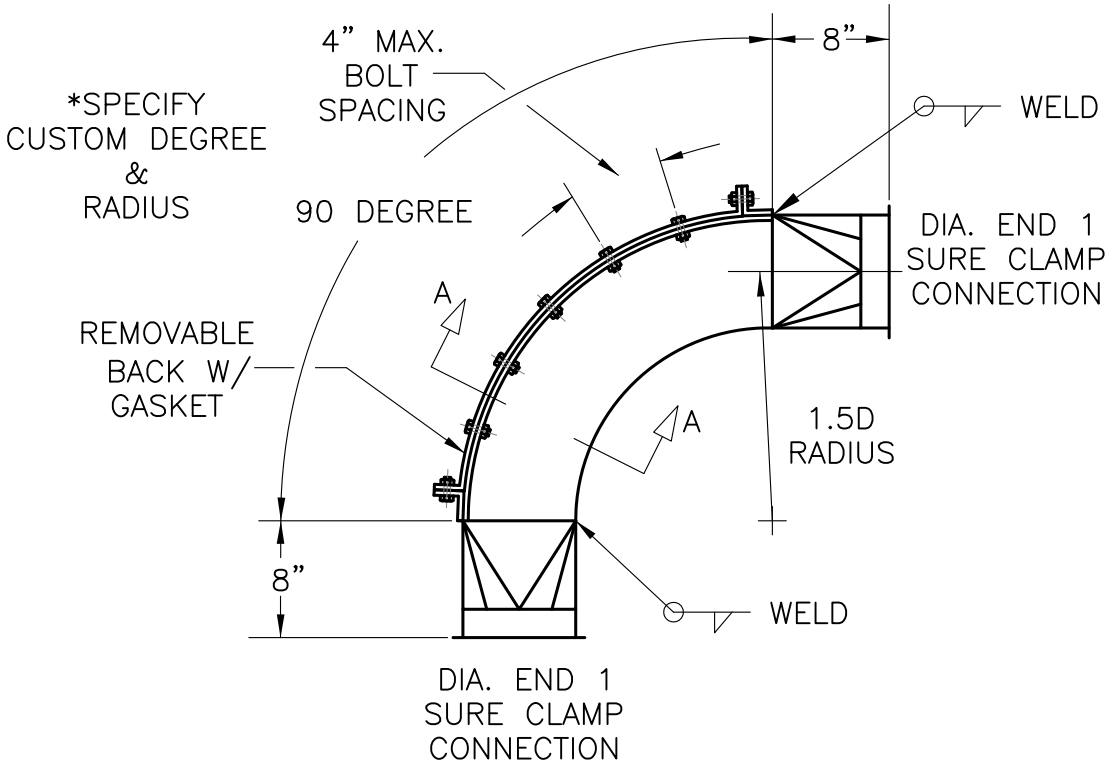

SYSTEM NUMBER/AREA : _____

MATERIAL : 16 GA. GALVANIZED

FABRICATE IN ACCORDANCE WITH
LANGDON'S DUCT CONSTRUCTION STANDARDS

TRANSVERSE JOINT

SURE CLAMP

LONGITUDINAL/TRANSVERSE SEAMS

ANSI/AWS D9.1–90 MIG WELDED (GMAW)

RL–4

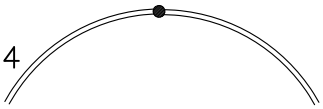

W = DIA END 1
D = DIA END 1

STANDARD SIZES 4"ø THRU 22"ø

TAG	QTY.	DEGREE	DIA. END 1

www.langdonsheetmetal.com

Langdon, Inc. 9865 Wayne Avenue. Cincinnati, Ohio. 45215 Ph. 513–733–5955 Fax. 513–733–8050

The above mentioned product, is protected by patents and trade marks
copyright 2008 All Rights Reserved updated 12/17/12

SUBMITTAL
SURE • CLAMP 16 GA. GALVANIZED FITTINGS
(PATENTED)

#52 ELBOWS/CLEANOUT DOOR

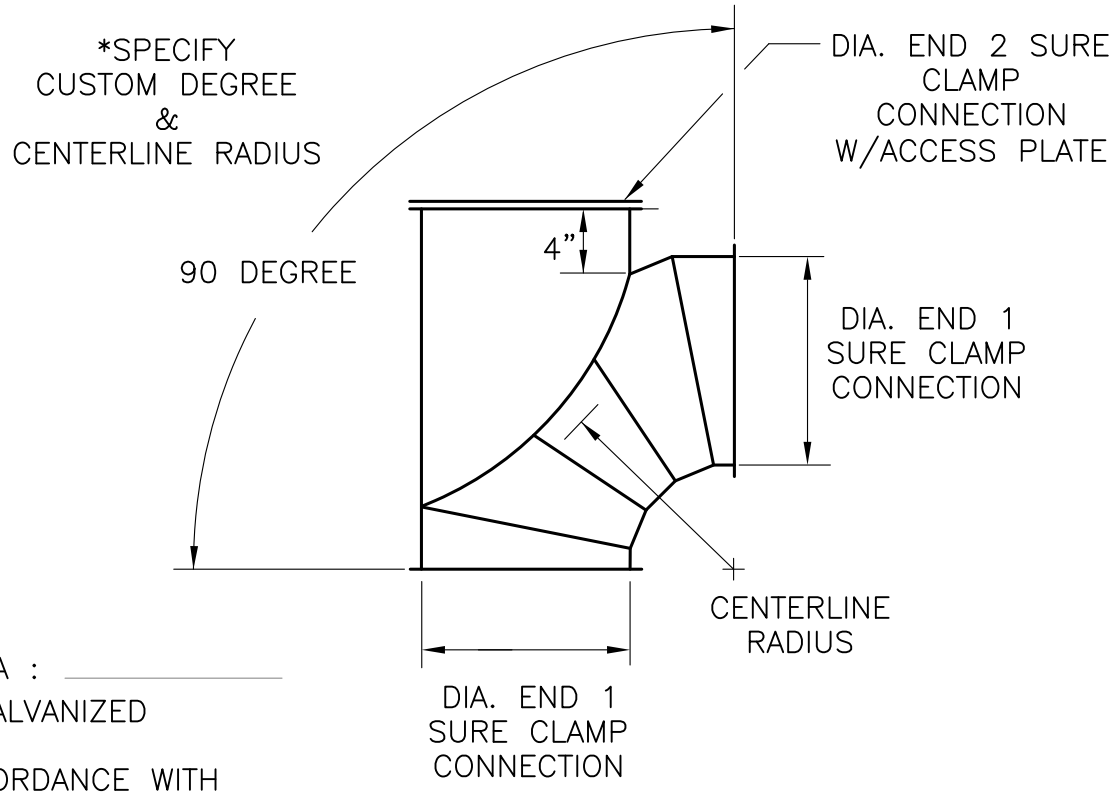

SYSTEM NUMBER/AREA : _____

MATERIAL : 16 GA. GALVANIZED

FABRICATE IN ACCORDANCE WITH
LANGDON'S DUCT CONSTRUCTION STANDARDS

TRANSVERSE JOINT
SURE CLAMP

LONGITUDINAL/TRANSVERSE SEAMS
ANSI/AWS D9.1–90 MIG WELDED (GMAW)

RL–4

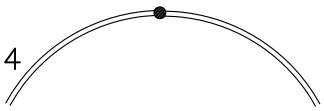

CENTERLINE RADIUS
1.5 X DIAMETER

GORE AMOUNT
90 DEG. = 5 GORE

STANDARD SIZES 4"ø THRU 22"ø

TAG	QTY.	DIA. END 1	DIA. END 2

www.langdonsheetmetal.com

Langdon, Inc. 9865 Wayne Avenue. Cincinnati, Ohio. 45215 Ph. 513–733–5955 Fax. 513–733–8050
The above mentioned product, is protected by patents and trade marks
copyright 2008 All Rights Reserved updated 12/17/12

SUBMITTAL
SURE • CLAMP 16 GA. GALVANIZED FITTINGS
(PATENTED)

#57 CONCENTRIC REDUCER

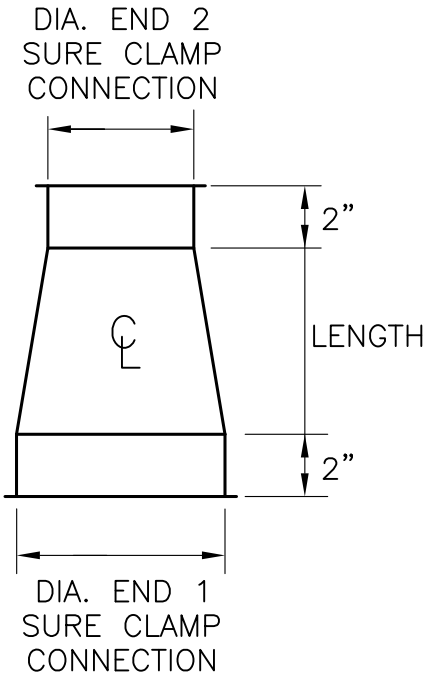

SYSTEM NUMBER/AREA : _____

MATERIAL : 16 GA. GALVANIZED

FABRICATE IN ACCORDANCE WITH
LANGDON'S DUCT CONSTRUCTION STANDARDS

TRANSVERSE JOINT
SURE CLAMP

LONGITUDINAL/TRANSVERSE SEAMS
ANSI/AWS D9.1–90 MIG WELDED (GMAW)

RL–4

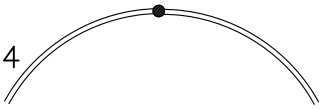

LENGTH (4" MINIMUM)
END 1 – END 2

STANDARD SIZES 4"ø THRU 22"ø

TAG	QTY.	DIA. END 1	DIA END 2

www.langdonsheetmetal.com

Langdon, Inc. 9865 Wayne Avenue. Cincinnati, Ohio. 45215 Ph. 513–733–5955 Fax. 513–733–8050
The above mentioned product, is protected by patents and trade marks
copyright 2008 All Rights Reserved updated 12/17/12

SUBMITTAL
SURE • CLAMP 16 GA. GALVANIZED FITTINGS
(PATENTED)
#69 ECENTRIC REDUCER

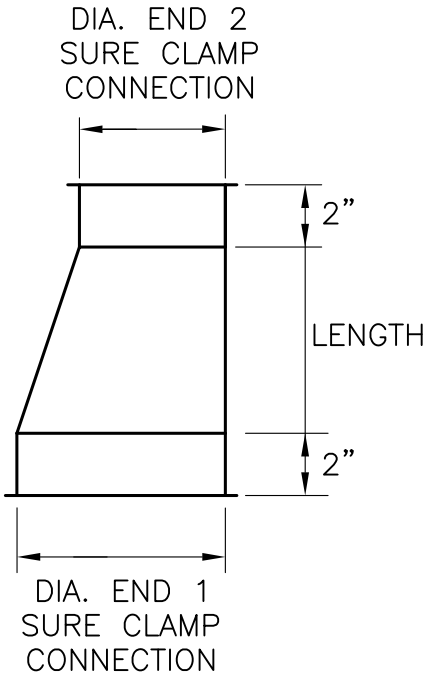

SYSTEM NUMBER/AREA : _____

MATERIAL : 16 GA. GALVANIZED

FABRICATE IN ACCORDANCE WITH
LANGDON'S DUCT CONSTRUCTION STANDARDS

TRANSVERSE JOINT
SURE CLAMP

LONGITUDINAL/TRANSVERSE SEAMS
ANSI/AWS D9.1–90 MIG WELDED (GMAW)

RL–4

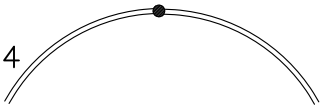

LENGTH (4" MINIMUM)
(END 1 – END 2) x 2

STANDARD SIZES 4"ø THRU 22"ø

TAG	QTY.	DIA. END 1	DIA END 2

www.langdonsheetmetal.com

Langdon, Inc. 9865 Wayne Avenue. Cincinnati, Ohio. 45215 Ph. 513–733–5955 Fax. 513–733–8050
The above mentioned product, is protected by patents and trade marks
copyright 2008 All Rights Reserved updated 12/17/12

SUBMITTAL
SURE • CLAMP 16 GA. GALVANIZED FITTINGS
(PATENTED)

#53 OFFSET

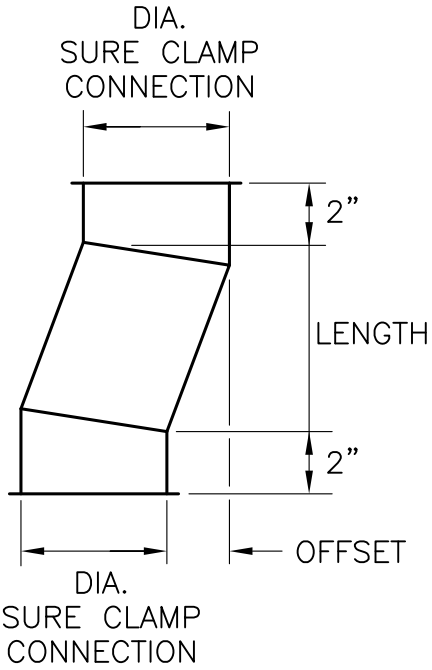

SYSTEM NUMBER/AREA : _____

MATERIAL : 16 GA. GALVANIZED

FABRICATE IN ACCORDANCE WITH
LANGDON'S DUCT CONSTRUCTION STANDARDS

TRANSVERSE JOINT
SURE CLAMP

LONGITUDINAL/TRANSVERSE SEAMS
ANSI/AWS D9.1–90 MIG WELDED (GMAW)

RL–4

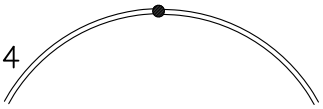

LENGTH (6" MINIMUM)
OFFSET X 2

STANDARD SIZES 4"ø THRU 22"ø

TAG	QTY.	DIA.	OFFSET

www.langdonsheetmetal.com

Langdon, Inc. 9865 Wayne Avenue. Cincinnati, Ohio. 45215 Ph. 513–733–5955 Fax. 513–733–8050
The above mentioned product, is protected by patents and trade marks
copyright 2008 All Rights Reserved updated 12/17/12

SUBMITTAL
SURE • CLAMP 16 GA. GALVANIZED FITTINGS
(PATENTED)
#100S STRAIGHT DUCTWORK

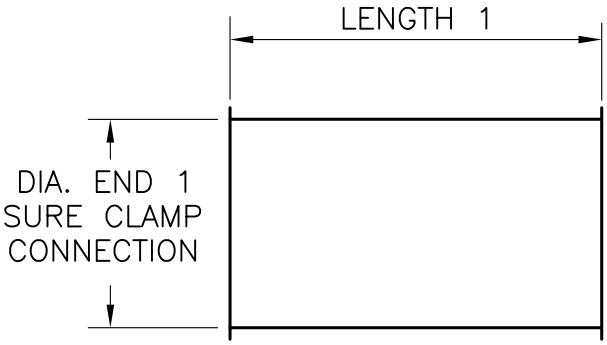

SYSTEM NUMBER/AREA : _____

MATERIAL : 16 GA. GALVANIZED

FABRICATE IN ACCORDANCE WITH
LANGDON'S DUCT CONSTRUCTION STANDARDS

TRANSVERSE JOINT
SURE CLAMP

LONGITUDINAL/TRANSVERSE SEAMS
ANSI/AWS D9.1–90 MIG WELDED (GMAW)

RL–4

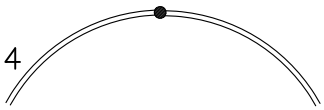

STANDARD SIZES 4"ø THRU 22"ø

LENGTH 1 = 10' MAX.

SPECIAL LENGTHS AVALIABLE UPON REQUEST

TAG	QTY.	DIA. END 1	LENGTH 1

www.langdonsheetmetal.com

Langdon, Inc. 9865 Wayne Avenue. Cincinnati, Ohio. 45215 Ph. 513–733–5955 Fax. 513–733–8050
The above mentioned product, is protected by patents and trade marks
copyright 2008 All Rights Reserved updated 12/17/12

SUBMITTAL
SURE • CLAMP 16 GA. GALVANIZED FITTINGS
(PATENTED)

#100 ADJ-12 DUCTWORK 12″ ADJUSTABLE LENGTH END

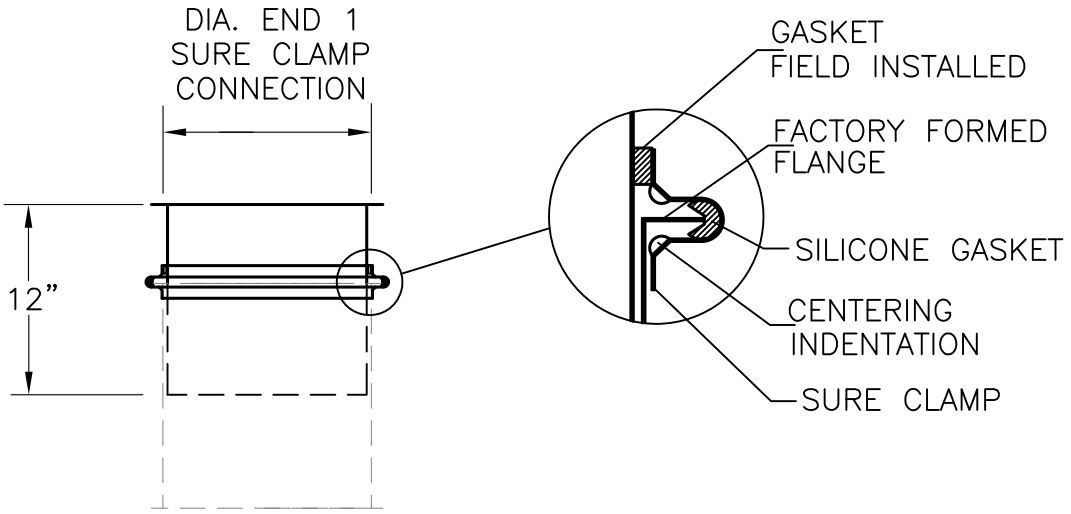

MECHANICAL FASTENERS
MAY BE REQUIRED

SYSTEM NUMBER/AREA : _____
MATERIAL : 16 GA. GALVANIZED

FABRICATE IN ACCORDANCE WITH
LANGDON'S DUCT CONSTRUCTION STANDARDS

TRANSVERSE JOINT
SURE CLAMP

LONGITUDINAL/TRANSVERSE SEAMS
ANSI/AWS D9.1-90 MIG WELDED (GMAW)

RL-4

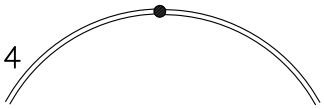

STANDARD SIZES 4”ø THRU 22”ø

NOTE: NOT RECOMMENDED FOR
VERTICAL DUCTWORK.

TAG	QTY.	DIA. END 1

www.langdonsheetmetal.com

Langdon, Inc. 9865 Wayne Avenue. Cincinnati, Ohio. 45215 Ph. 513-733-5955 Fax. 513-733-8050
The above mentioned product, is protected by patents and trade marks
copyright 2008 All Rights Reserved updated 12/17/12

SUBMITTAL
SURE • CLAMP 16 GA. GALVANIZED FITTINGS
(PATENTED)

#100 ADJ-24 DUCTWORK 24″ ADJUSTABLE LENGTH END

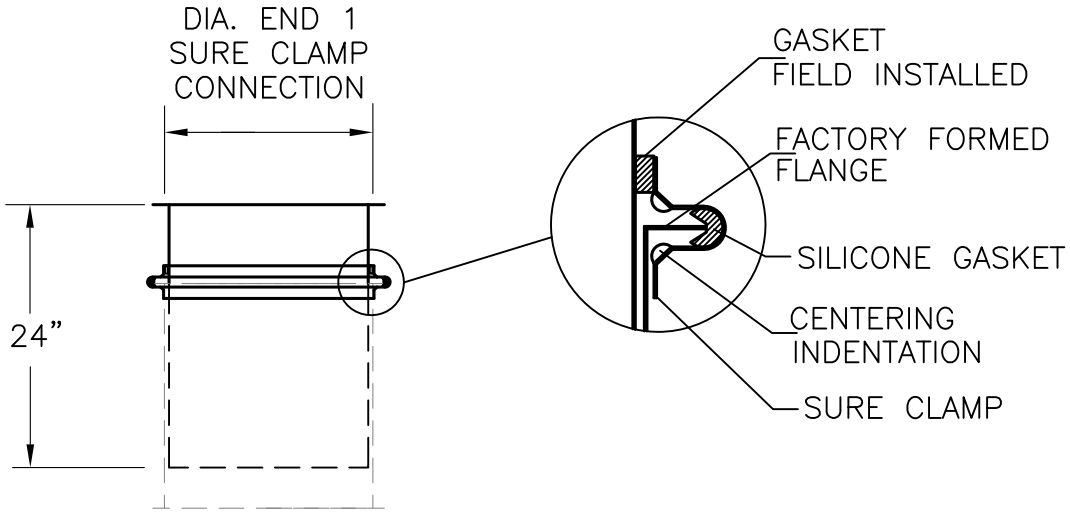

MECHANICAL FASTENERS
MAY BE REQUIRED

SYSTEM NUMBER/AREA : _____
MATERIAL : 16 GA. GALVANIZED

FABRICATE IN ACCORDANCE WITH
LANGDON'S DUCT CONSTRUCTION STANDARDS

TRANSVERSE JOINT
SURE CLAMP

LONGITUDINAL/TRANSVERSE SEAMS
ANSI/AWS D9.1-90 MIG WELDED (GMAW)

RL-4

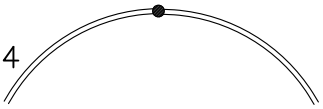

STANDARD SIZES 4”ø THRU 22”ø

NOTE: NOT RECOMMENDED FOR
VERTICAL DUCTWORK.

TAG	QTY.	DIA. END 1

www.langdonsheetmetal.com

Langdon, Inc. 9865 Wayne Avenue. Cincinnati, Ohio. 45215 Ph. 513-733-5955 Fax. 513-733-8050
The above mentioned product, is protected by patents and trade marks
copyright 2008 All Rights Reserved updated 12/17/12

SUBMITTAL
SURE • CLAMP 16 GA. GALVANIZED FITTINGS
(PATENTED)

#02 END CAP

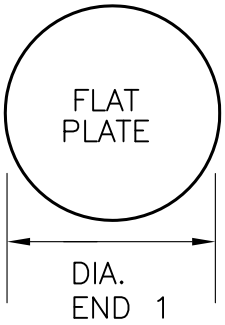

	TAG	QTY.	DIA. END 1
SYSTEM NUMBER/AREA : _____			
MATERIAL : 16 GA. GALVANIZED			
FABRICATE IN ACCORDANCE WITH			
LANGDON'S DUCT CONSTRUCTION STANDARDS			
TRANSVERSE JOINT			
SURE CLAMP			
LONGITUDINAL/TRANSVERSE SEAMS			
ANSI/AWS D9.1-90 MIG WELDED (GMAW)			
RL-4			
STANDARD SIZES 4"ø THRU 22"ø			

www.langdonsheetmetal.com

Langdon, Inc. 9865 Wayne Avenue. Cincinnati, Ohio. 45215 Ph. 513-733-5955 Fax. 513-733-8050

The above mentioned product, is protected by patents and trade marks
copyright 2008 All Rights Reserved updated 12/17/12

SUBMITTAL
SURE • CLAMP 16 GA. GALVANIZED FITTINGS
(PATENTED)

#55 STRAIGHT 90 DEGREE TEE

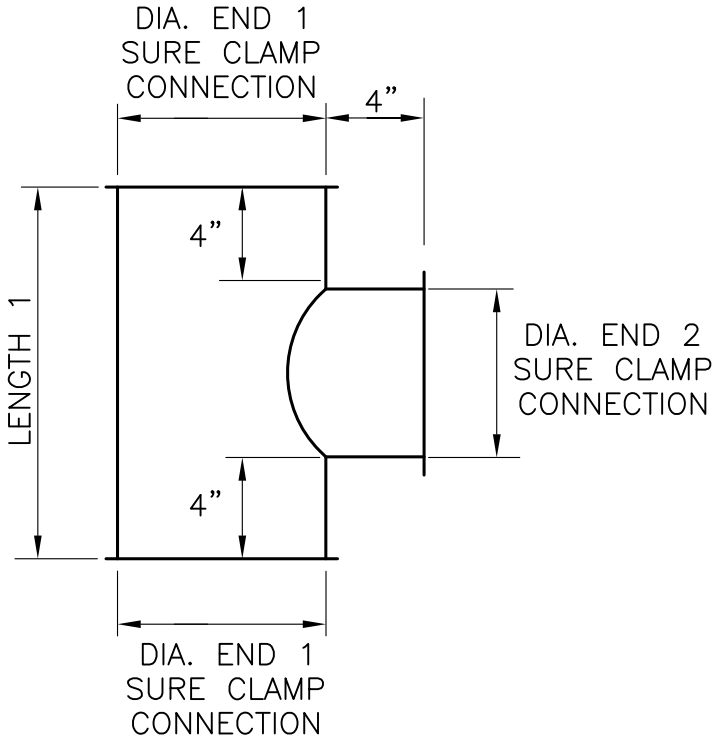

SYSTEM NUMBER/AREA : _____

MATERIAL : 16 GA. GALVANIZED

FABRICATE IN ACCORDANCE WITH
LANGDON’S DUCT CONSTRUCTION STANDARDS

TRANSVERSE JOINT

SURE CLAMP

LONGITUDINAL/TRANSVERSE SEAMS

ANSI/AWS D9.1–90 MIG WELDED (GMAW)

RL–4

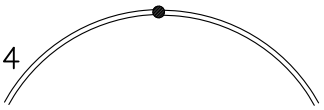

LENGTH 1

END 2 + 8”

STANDARD SIZES 4”ø THRU 22”ø

TAG	QTY.	DIA. END 1	DIA. END 2

www.langdonsheetmetal.com

Langdon, Inc. 9865 Wayne Avenue. Cincinnati, Ohio. 45215 Ph. 513–733–5955 Fax. 513–733–8050
The above mentioned product, is protected by patents and trade marks
copyright 2008 All Rights Reserved updated 12/17/12

SUBMITTAL
SURE • CLAMP 16 GA. GALVANIZED FITTINGS
(PATENTED)

#65 CONCENTRIC REDUCING TEE 90 DEGREE

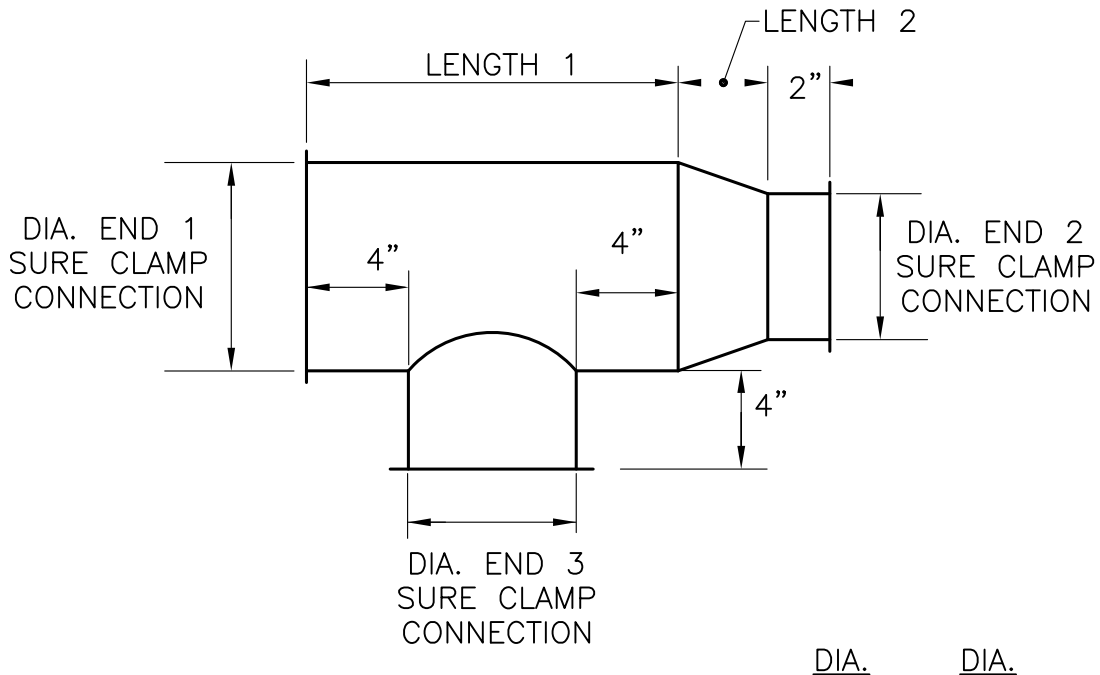

SYSTEM NUMBER/AREA : _____

MATERIAL : 16 GA. GALVANIZED

FABRICATE IN ACCORDANCE WITH
LANGDON'S DUCT CONSTRUCTION STANDARDS

TRANSVERSE JOINT
SURE CLAMP

LONGITUDINAL/TRANSVERSE SEAMS
ANSI/AWS D9.1–90 MIG WELDED (GMAW)

RL–4

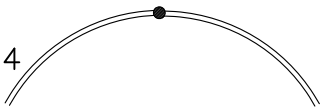

LENGTH 1
END 3 + 8"

LENGTH 2 (4" MINIMUM)
END 1 – END 2

STANDARD SIZES 4"ø THRU 22"ø

TAG	QTY.	DIA. END 1	DIA. END 2	DIA. END 3

www.langdonsheetmetal.com

Langdon, Inc. 9865 Wayne Avenue. Cincinnati, Ohio. 45215 Ph. 513–733–5955 Fax. 513–733–8050
The above mentioned product, is protected by patents and trade marks
copyright 2008 All Rights Reserved updated 12/17/12

SUBMITTAL
SURE • CLAMP 16 GA. GALVANIZED FITTINGS
(PATENTED)

#65F ECCENTRIC REDUCING TEE 90 DEGREE

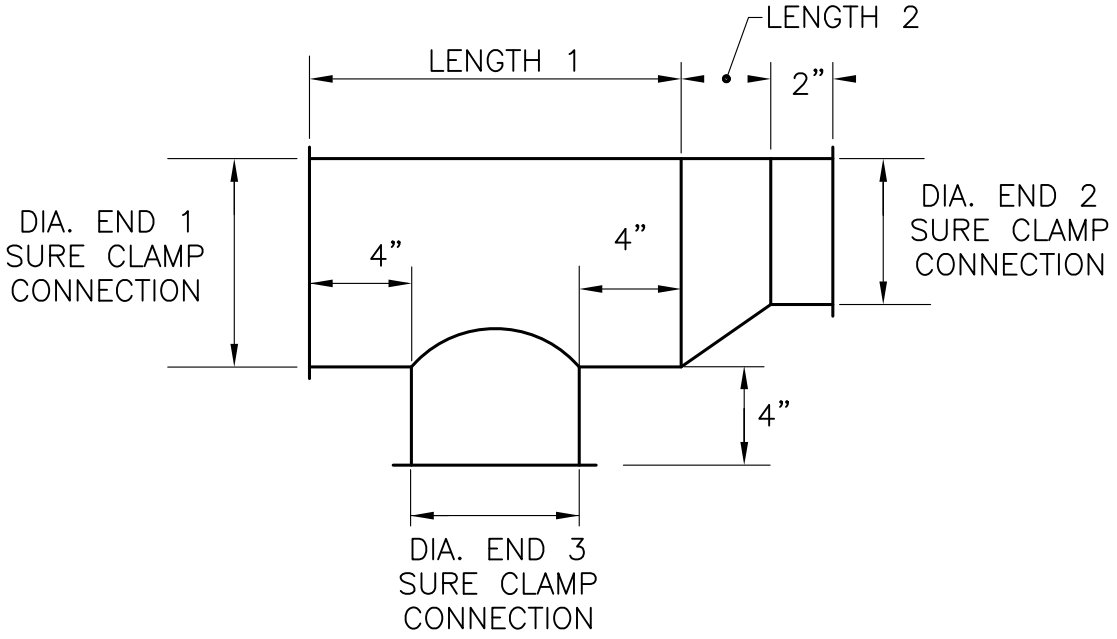

SYSTEM NUMBER/AREA : _____

MATERIAL : 16 GA. GALVANIZED

FABRICATE IN ACCORDANCE WITH
LANGDON'S DUCT CONSTRUCTION STANDARDS

TRANSVERSE JOINT
SURE CLAMP

LONGITUDINAL/TRANSVERSE SEAMS
ANSI/AWS D9.1–90 MIG WELDED (GMAW)

RL–4

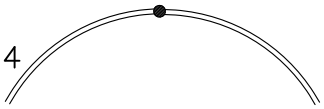

LENGTH 1
END 3 + 8"

LENGTH 2 (4" MINIMUM)
(END 1 – END 2) X 2

STANDARD SIZES 4"ø THRU 22"ø

TAG	QTY.	DIA. END 1	DIA. END 2	DIA. END 3

www.langdonsheetmetal.com

Langdon, Inc. 9865 Wayne Avenue. Cincinnati, Ohio. 45215 Ph. 513–733–5955 Fax. 513–733–8050

The above mentioned product, is protected by patents and trade marks
copyright 2008 All Rights Reserved updated 12/17/12

SUBMITTAL
SURE • CLAMP 16 GA. GALVANIZED FITTINGS
(PATENTED)

#54 LATERAL

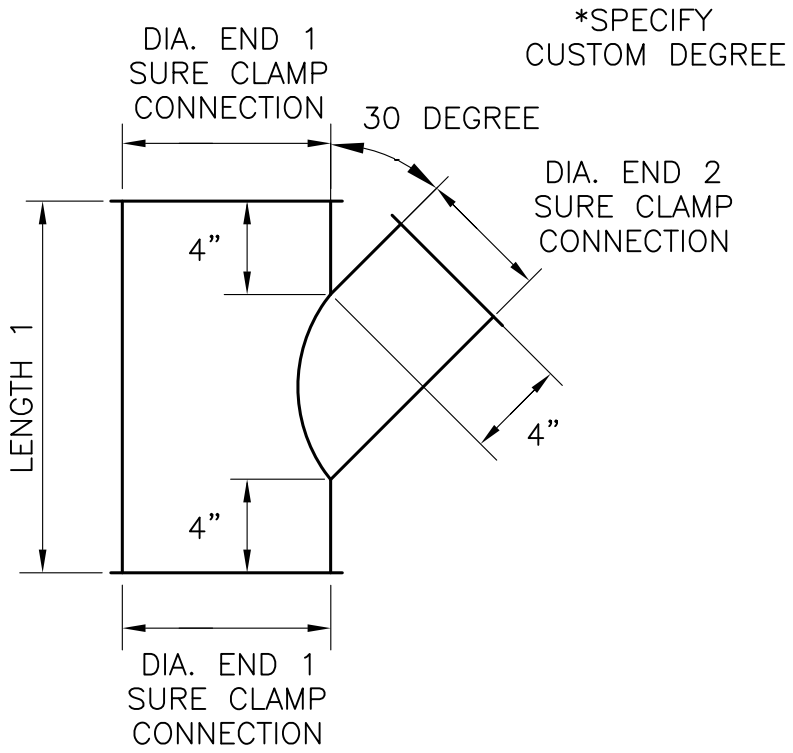

SYSTEM NUMBER/AREA : _____

MATERIAL : 16 GA. GALVANIZED

FABRICATE IN ACCORDANCE WITH
LANGDON'S DUCT CONSTRUCTION STANDARDS

TRANSVERSE JOINT
SURE CLAMP

LONGITUDINAL/TRANSVERSE SEAMS
ANSI/AWS D9.1–90 MIG WELDED (GMAW)

RL–4

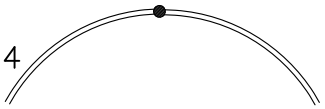

LENGTH 1

30 DEGREE: DIA. END 2 X (2) + 8
15 DEGREE: DIA. END 2 X (3.86) + 8

STANDARD SIZES 4"ø THRU 22"ø

TAG	QTY.	DIA. END 1	DIA. END 2

www.langdonsheetmetal.com

Langdon, Inc. 9865 Wayne Avenue. Cincinnati, Ohio. 45215 Ph. 513–733–5955 Fax. 513–733–8050
The above mentioned product, is protected by patents and trade marks
copyright 2008 All Rights Reserved updated 12/17/12

SUBMITTAL
SURE • CLAMP 16 GA. GALVANIZED FITTINGS
(PATENTED)

#54 LATERAL/CLEANOUT DOOR

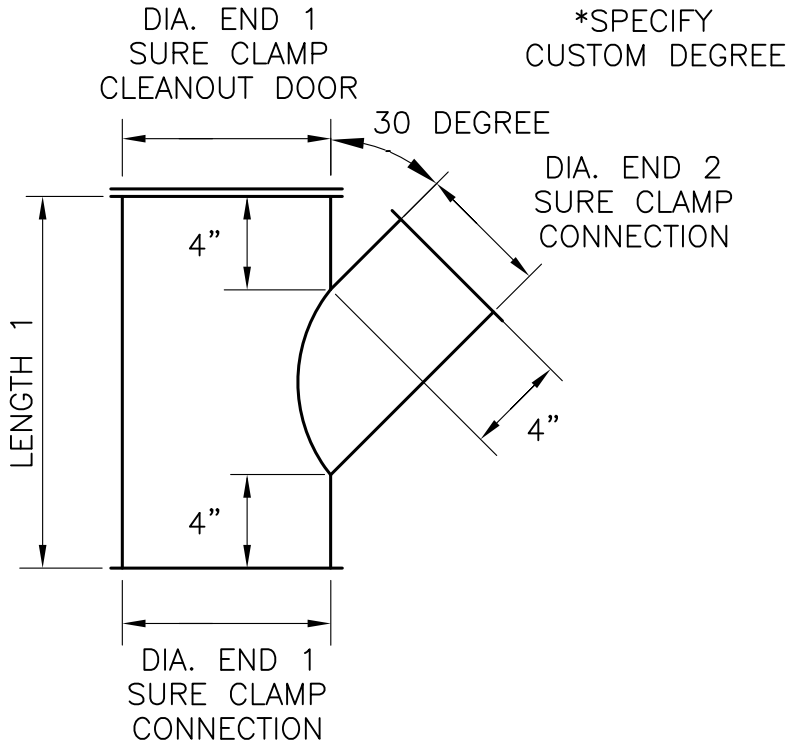

SYSTEM NUMBER/AREA : _____

MATERIAL : 16 GA. GALVANIZED

FABRICATE IN ACCORDANCE WITH
LANGDON'S DUCT CONSTRUCTION STANDARDS

TRANSVERSE JOINT

SURE CLAMP

LONGITUDINAL/TRANSVERSE SEAMS

ANSI/AWS D9.1–90 MIG WELDED (GMAW)

RL–4

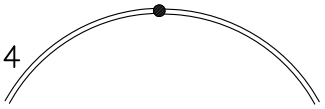

LENGTH 1

30 DEGREE: DIA. END 2 X (2) + 8
15 DEGREE: DIA. END 2 X (3.86) + 8

STANDARD SIZES 4"ø THRU 22"ø

TAG	QTY.	DIA. END 1	DIA. END 2

www.langdonsheetmetal.com

Langdon, Inc. 9865 Wayne Avenue. Cincinnati, Ohio. 45215 Ph. 513–733–5955 Fax. 513–733–8050
The above mentioned product, is protected by patents and trade marks
copyright 2008 All Rights Reserved updated 12/17/12

SUBMITTAL
SURE • CLAMP 16 GA. GALVANIZED FITTINGS
(PATENTED)

#63 REDUCING LATERAL

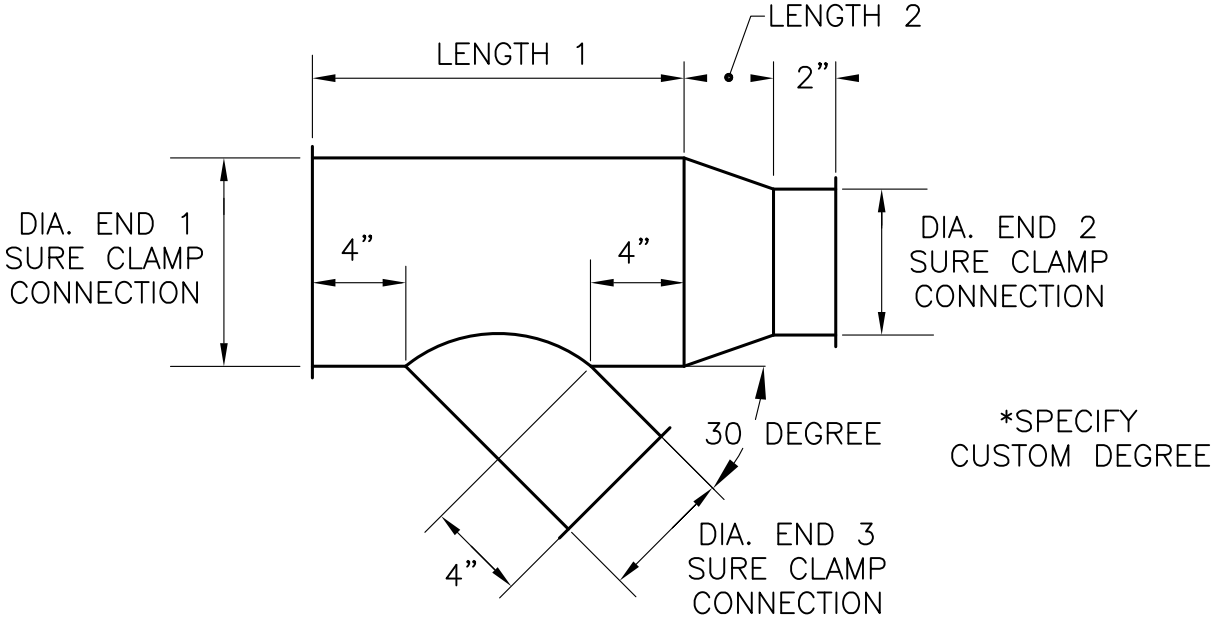

SYSTEM NUMBER/AREA : _____

MATERIAL : 16 GA. GALVANIZED

FABRICATE IN ACCORDANCE WITH
LANGDON'S DUCT CONSTRUCTION STANDARDS

TRANSVERSE JOINT
SURE CLAMP

LONGITUDINAL/TRANSVERSE SEAMS
ANSI/AWS D9.1–90 MIG WELDED (GMAW)

RL–4

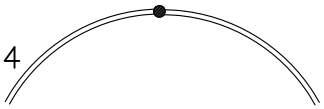

LENGTH 1

30 DEGREE: DIA. END 3 X (2) + 8
15 DEGREE: DIA. END 2 X (3.86) + 8

LENGTH 2 (4" MINIMUM)
END 1 – END 2

STANDARD SIZES 4"ø THRU 22"ø

TAG	QTY.	DIA. END 1	DIA. END 2	DIA. END 3

www.langdonsheetmetal.com

Langdon, Inc. 9865 Wayne Avenue. Cincinnati, Ohio. 45215 Ph. 513–733–5955 Fax. 513–733–8050
The above mentioned product, is protected by patents and trade marks
copyright 2008 All Rights Reserved updated 12/17/12

SUBMITTAL
SURE • CLAMP 16 GA. GALVANIZED FITTINGS
(PATENTED)

#63F ECCENTRIC REDUCING LATERAL

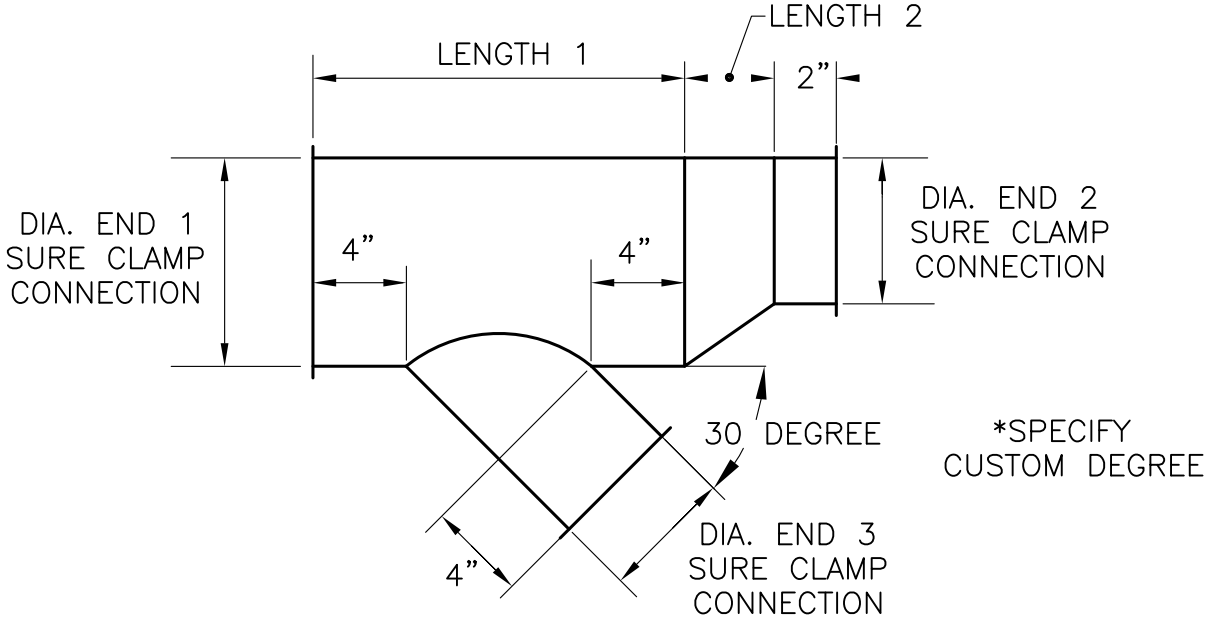

SYSTEM NUMBER/AREA : _____
MATERIAL : 16 GA. GALVANIZED

FABRICATE IN ACCORDANCE WITH
LANGDON'S DUCT CONSTRUCTION STANDARDS

TRANSVERSE JOINT
SURE CLAMP

LONGITUDINAL/TRANSVERSE SEAMS
ANSI/AWS D9.1–90 MIG WELDED (GMAW)

RL–4

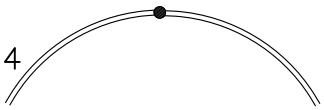

LENGTH 1

30 DEGREE: DIA. END 3 X (2) + 8
15 DEGREE: DIA. END 2 X (3.86) + 8

LENGTH 2 (4" MINIMUM)
(END 1 – END 2) X 2

STANDARD SIZES 4"ø THRU 22"ø

TAG	QTY.	DIA. END 1	DIA. END 2	DIA. END 3

www.langdonsheetmetal.com

Langdon, Inc. 9865 Wayne Avenue. Cincinnati, Ohio. 45215 Ph. 513–733–5955 Fax. 513–733–8050

The above mentioned product, is protected by patents and trade marks
copyright 2008 All Rights Reserved updated 12/17/12

SUBMITTAL
SURE • CLAMP 16 GA. GALVANIZED FITTINGS
(PATENTED)

#73 LATERAL CROSS

SYSTEM NUMBER/AREA : _____
MATERIAL : 16 GA. GALVANIZED

FABRICATE IN ACCORDANCE WITH
LANGDON'S DUCT CONSTRUCTION STANDARDS

TRANSVERSE JOINT
SURE CLAMP

LONGITUDINAL/TRANSVERSE SEAMS
ANSI/AWS D9.1–90 MIG WELDED (GMAW)

RL–4

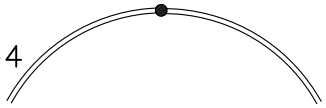

LENGTH 1
30 DEGREE: DIA. END 3 X (2) + 8

STANDARD SIZES 4"ø THRU 22"ø

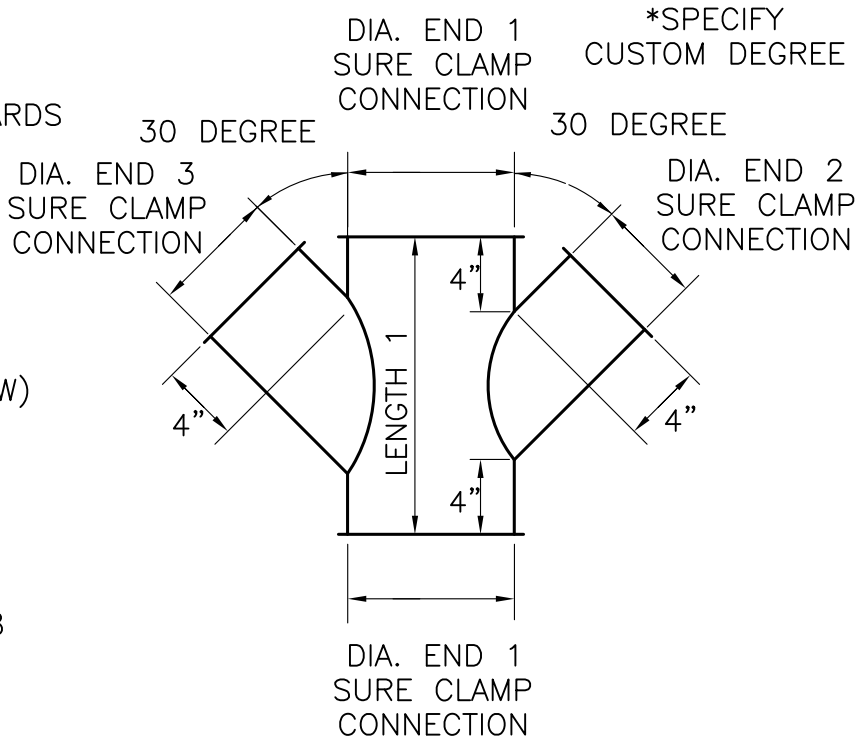

TAG	QTY.	DIA. END 1	DIA END 2	DIA END 3

www.langdonsheetmetal.com

Langdon, Inc. 9865 Wayne Avenue. Cincinnati, Ohio. 45215 Ph. 513–733–5955 Fax. 513–733–8050
The above mentioned product, is protected by patents and trade marks
copyright 2008 All Rights Reserved updated 12/17/12

SUBMITTAL
SURE • CLAMP 16 GA. GALVANIZED FITTINGS
(PATENTED)

#64 REDUCING LATERAL CROSS

SYSTEM NUMBER/AREA : _____
MATERIAL : 16 GA. GALVANIZED

FABRICATE IN ACCORDANCE WITH
LANGDON'S DUCT CONSTRUCTION STANDARDS

TRANSVERSE JOINT
SURE CLAMP

LONGITUDINAL/TRANSVERSE SEAMS
ANSI/AWS D9.1–90 MIG WELDED (GMAW)

RL–4

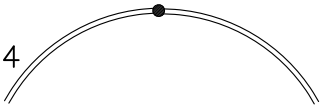

LENGTH 1
30 DEGREE: DIA. END 3 X (2) + 8

LENGTH 2 (4" MINIMUM)
END 1 – END 2

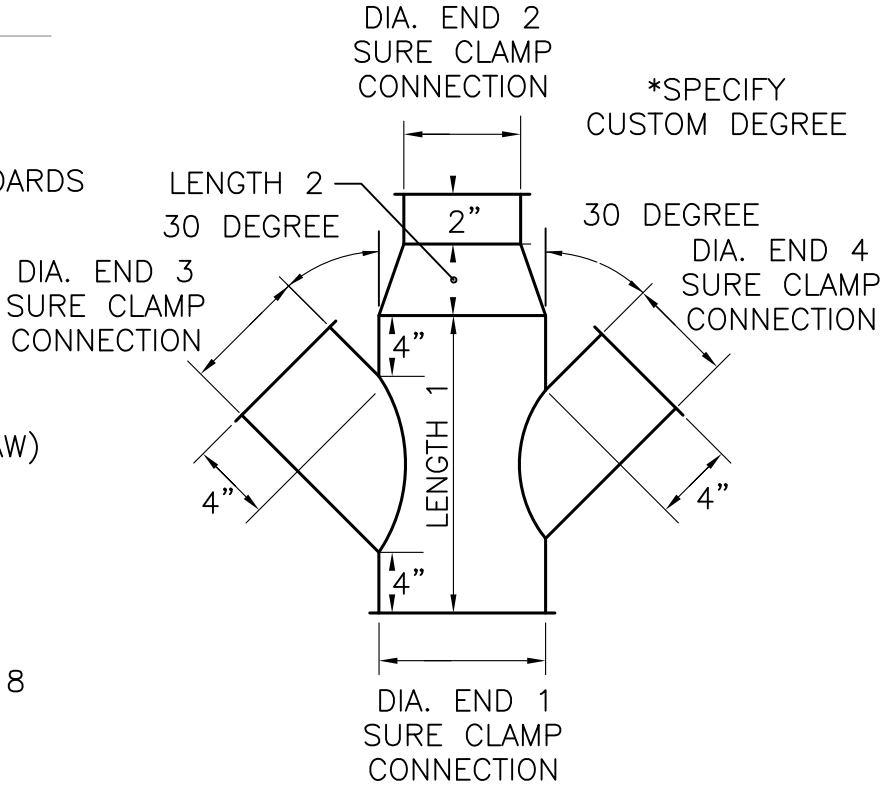

STANDARD SIZES 4"ø THRU 22"ø

TAG	QTY.	DIA. END 1	DIA END 2	DIA END 3	DIA END 4

www.langdonsheetmetal.com

Langdon, Inc. 9865 Wayne Avenue. Cincinnati, Ohio. 45215 Ph. 513–733–5955 Fax. 513–733–8050
The above mentioned product, is protected by patents and trade marks
copyright 2008 All Rights Reserved updated 12/17/12

SUBMITTAL
SURE • CLAMP 16 GA. GALVANIZED FITTINGS
(PATENTED)

#132A 30° Y BRANCH

*SPECIFY CUSTOM DEGREE

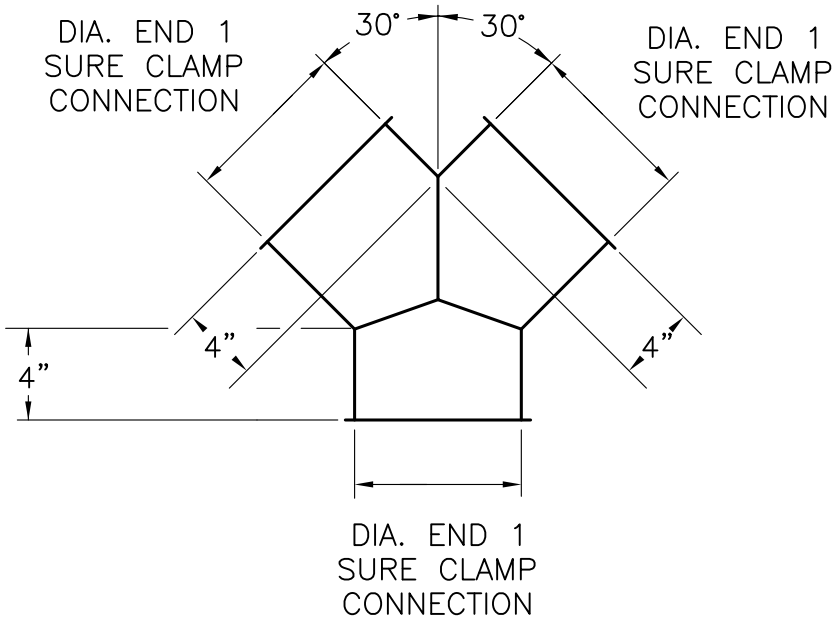

SYSTEM NUMBER/AREA : _____

MATERIAL : 16 GA. GALVANIZED

FABRICATE IN ACCORDANCE WITH
LANGDON'S DUCT CONSTRUCTION STANDARDS

TRANSVERSE JOINT
SURE CLAMP

LONGITUDINAL/TRANSVERSE SEAMS
ANSI/AWS D9.1–90 MIG WELDED (GMAW)

RL–4

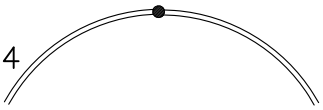

STANDARD SIZES 4"ø THRU 22"ø

TAG	QTY.	DIA. END 1

www.langdonsheetmetal.com

Langdon, Inc. 9865 Wayne Avenue. Cincinnati, Ohio. 45215 Ph. 513–733–5955 Fax. 513–733–8050
The above mentioned product, is protected by patents and trade marks
copyright 2008 All Rights Reserved updated 12/17/12

SUBMITTAL
SURE • CLAMP 16 GA. GALVANIZED FITTINGS
(PATENTED)

#132 30° Y BRANCH REDUCING

*SPECIFY CUSTOM DEGREE

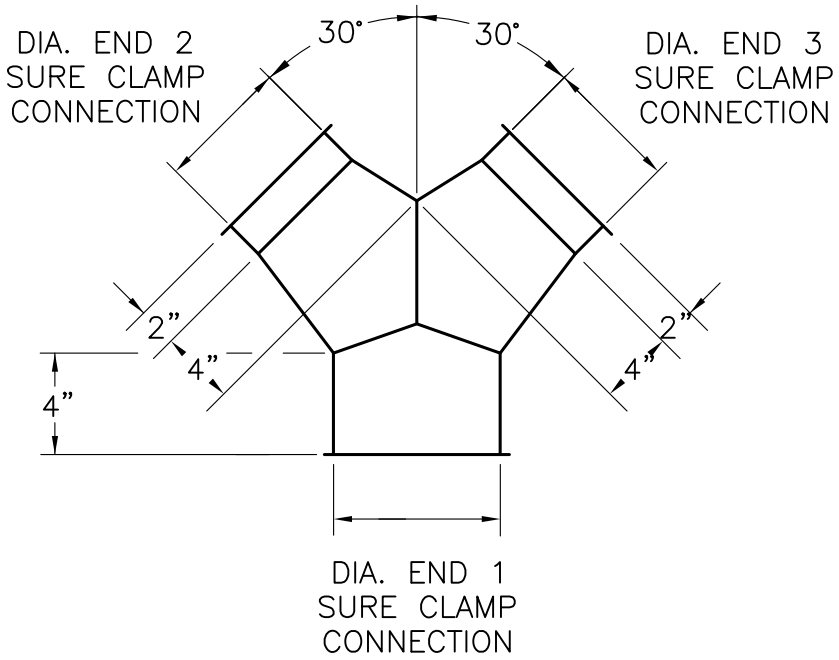

SYSTEM NUMBER/AREA : _____

MATERIAL : 16 GA. GALVANIZED

FABRICATE IN ACCORDANCE WITH
LANGDON'S DUCT CONSTRUCTION STANDARDS

TRANSVERSE JOINT
SURE CLAMP

LONGITUDINAL/TRANSVERSE SEAMS
ANSI/AWS D9.1–90 MIG WELDED (GMAW)

RL–4

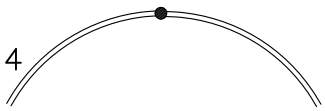

STANDARD SIZES 4"ø THRU 22"ø

TAG	QTY.	DIA. END 1	DIA. END 2	DIA. END 3

www.langdonsheetmetal.com

Langdon, Inc. 9865 Wayne Avenue. Cincinnati, Ohio. 45215 Ph. 513–733–5955 Fax. 513–733–8050

The above mentioned product, is protected by patents and trade marks
copyright 2008 All Rights Reserved updated 12/17/12

SUBMITTAL
SURE • CLAMP 16 GA. GALVANIZED FITTINGS
(PATENTED)

#50 CENTER LINE SQUARE TO ROUND

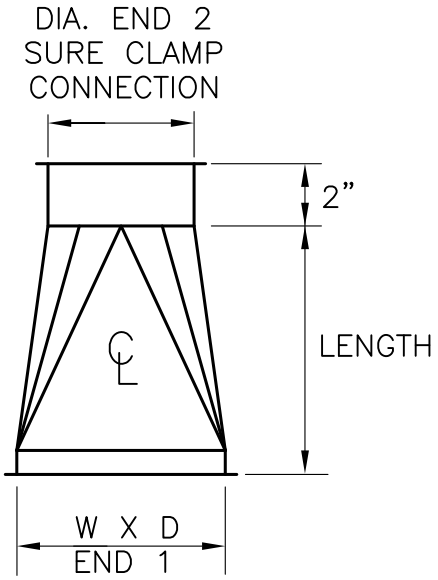

FLG–RAW

SYSTEM NUMBER/AREA : _____

MATERIAL : 16 GA. GALVANIZED

FABRICATE IN ACCORDANCE WITH
LANGDON'S DUCT CONSTRUCTION STANDARDS

END 1 TRANSVERSE JOINT
FLG–RAW

END 2 TRANSVERSE JOINT
SURE CLAMP

LONGITUDINAL/TRANSVERSE SEAMS
ANSI/AWS D9.1–90 MIG WELDED (GMAW)

RL–4

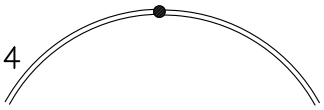

LENGTH (6" MINIMUM)
END 1 (W OR D LARGEST ONE)
– END 2
STANDARD SIZES 4"ø THRU 22"ø

TAG	QTY.	W X D END 1 CENTERLINE	CONN. TYPE END 1	DIA. END 2 CENTERLINE
		X		
		X		
		X		
		X		
		X		
		X		
		X		
		X		
		X		
		X		
		X		

www.langdonsheetmetal.com

Langdon, Inc. 9865 Wayne Avenue. Cincinnati, Ohio. 45215 Ph. 513–733–5955 Fax. 513–733–8050
The above mentioned product, is protected by patents and trade marks
copyright 2008 All Rights Reserved updated 12/17/12

SUBMITTAL
SURE • CLAMP 16 GA. GALVANIZED FITTINGS
(PATENTED)

#74 OFFSET SQUARE TO ROUND

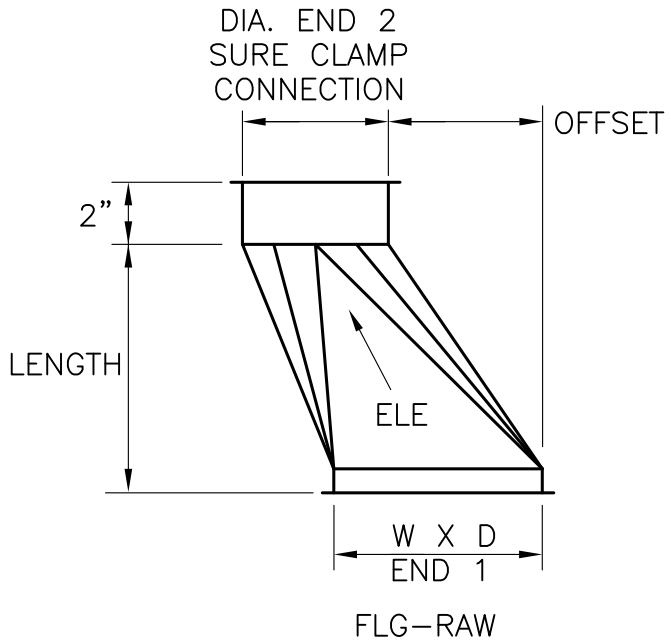

SYSTEM NUMBER/AREA : _____

MATERIAL : 16 GA. GALVANIZED

FABRICATE IN ACCORDANCE WITH
LANGDON'S DUCT CONSTRUCTION STANDARDS

END 1 TRANSVERSE JOINT
FLG–RAW

END 2 TRANSVERSE JOINT
SURE CLAMP

LONGITUDINAL/TRANSVERSE SEAMS
ANSI/AWS D9.1–90 MIG WELDED (GMAW)

RL–4

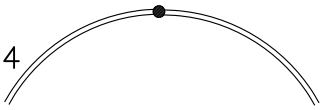

LENGTH (6" MINIMUM)
OFFSET X 2

TAG	QTY.	W X D END 1	CONN. TYPE END 1	DIA END 2	OFF.	ELE. TU/TD
		X				
		X				
		X				
		X				
		X				
		X				
		X				
		X				
		X				
		X				

STANDARD SIZES 4"ø THRU 22"ø

www.langdonsheetmetal.com

Langdon, Inc. 9865 Wayne Avenue. Cincinnati, Ohio. 45215 Ph. 513–733–5955 Fax. 513–733–8050
The above mentioned product, is protected by patents and trade marks
copyright 2008 All Rights Reserved updated 12/17/12

SUBMITTAL
SURE • CLAMP 16 GA. GALVANIZED FITTINGS
(PATENTED)

#67-90 FIELD MOUNTED STRAIGHT TAP ON ROUND

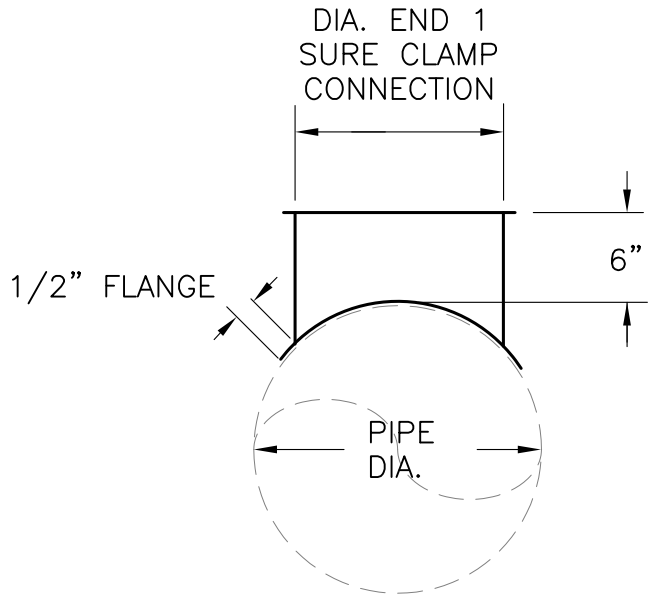

SYSTEM NUMBER/AREA : _____

MATERIAL : 16 GA. GALVANIZED

FABRICATE IN ACCORDANCE WITH
LANGDON'S DUCT CONSTRUCTION STANDARDS

TRANSVERSE JOINT
SURE CLAMP

LONGITUDINAL/TRANSVERSE SEAMS
ANSI/AWS D9.1-90 MIG WELDED (GMAW)

RL-4

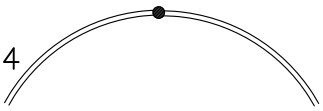

STANDARD SIZES 4"ø THRU 22"ø

TAG	QTY.	DIA. END 1	PIPE DIA.

www.langdonsheetmetal.com

Langdon, Inc. 9865 Wayne Avenue. Cincinnati, Ohio. 45215 Ph. 513-733-5955 Fax. 513-733-8050
The above mentioned product, is protected by patents and trade marks
copyright 2008 All Rights Reserved updated 12/17/12

SUBMITTAL
SURE • CLAMP 16 GA. GALVANIZED FITTINGS
(PATENTED)
#67 FIELD MOUNTED LATERAL TAP

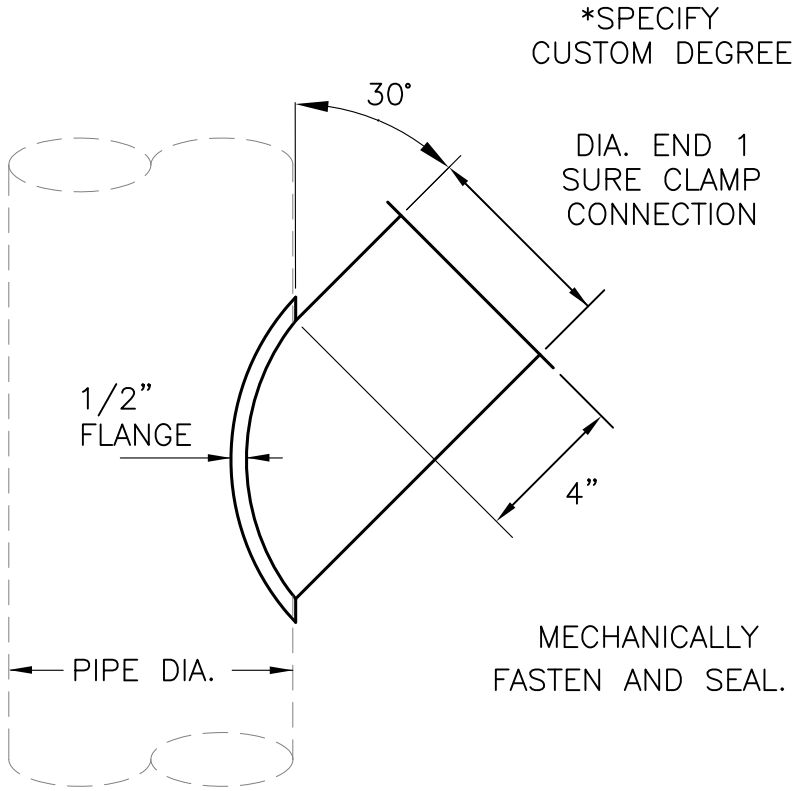

SYSTEM NUMBER/AREA : _____

MATERIAL : 16 GA. GALVANIZED

FABRICATE IN ACCORDANCE WITH
LANGDON'S DUCT CONSTRUCTION STANDARDS

TRANSVERSE JOINT
SURE CLAMP

LONGITUDINAL/TRANSVERSE SEAMS
ANSI/AWS D9.1–90 MIG WELDED (GMAW)

RL–4

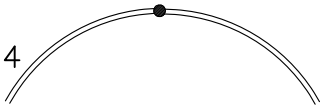

STANDARD SIZES 4"ø THRU 22"ø

TAG	QTY.	DIA. END 1	PIPE DIA.

www.langdonsheetmetal.com

Langdon, Inc. 9865 Wayne Avenue. Cincinnati, Ohio. 45215 Ph. 513–733–5955 Fax. 513–733–8050
The above mentioned product, is protected by patents and trade marks
copyright 2008 All Rights Reserved updated 12/17/12

SUBMITTAL
SURE • CLAMP 16 GA. GALVANIZED FITTINGS
(PATENTED)
#54S LATERAL SHOP MOUNTED

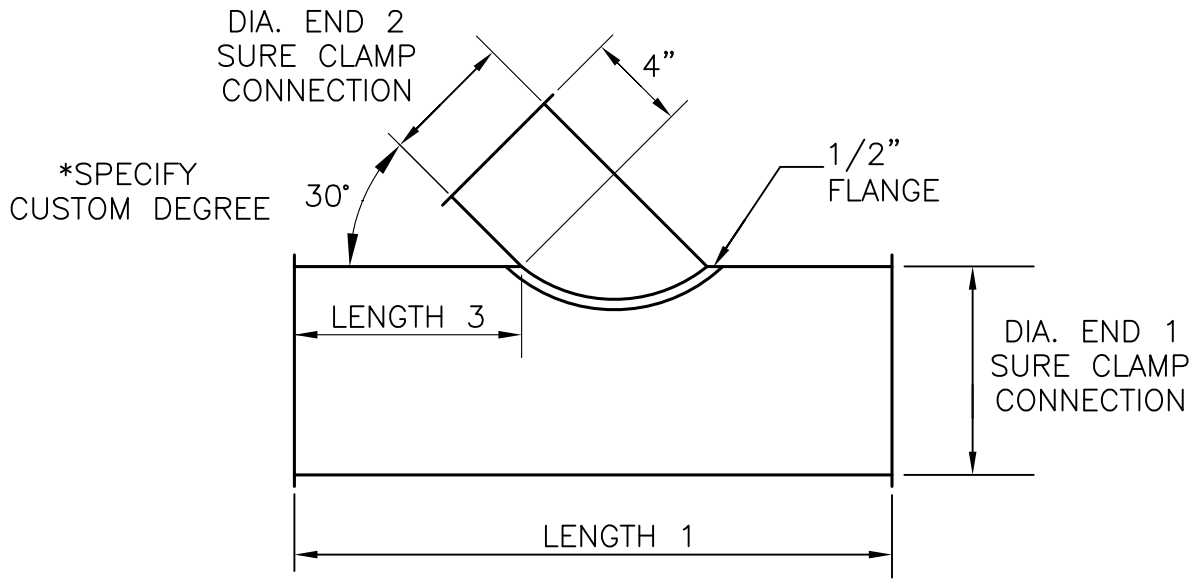

SYSTEM NUMBER/AREA : _____
MATERIAL : 16 GA. GALVANIZED

FABRICATE IN ACCORDANCE WITH
LANGDON'S DUCT CONSTRUCTION STANDARDS

TRANSVERSE JOINT
SURE CLAMP

LONGITUDINAL/TRANSVERSE SEAMS
ANSI/AWS D9.1–90 MIG WELDED (GMAW)

RL–4

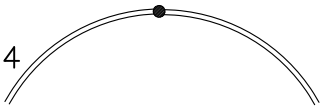

BODY LONGITUDINAL SEAM
ANSI/AWS D9.1–90 MIG WELDED (GMAW)

RL–4

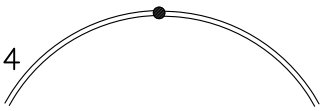

STANDARD SIZES 4"ø THRU 22"ø

TAG	QTY.	DIA. END 1	DIA. END 2	LENGTH 1	LENGTH 3

www.langdonsheetmetal.com

Langdon, Inc. 9865 Wayne Avenue. Cincinnati, Ohio. 45215 Ph. 513–733–5955 Fax. 513–733–8050
The above mentioned product, is protected by patents and trade marks
copyright 2008 All Rights Reserved updated 12/17/12

SUBMITTAL
SURE • CLAMP 16 GA. GALVANIZED FITTINGS
(PATENTED)

#56T CONICAL TAP ON ROUND

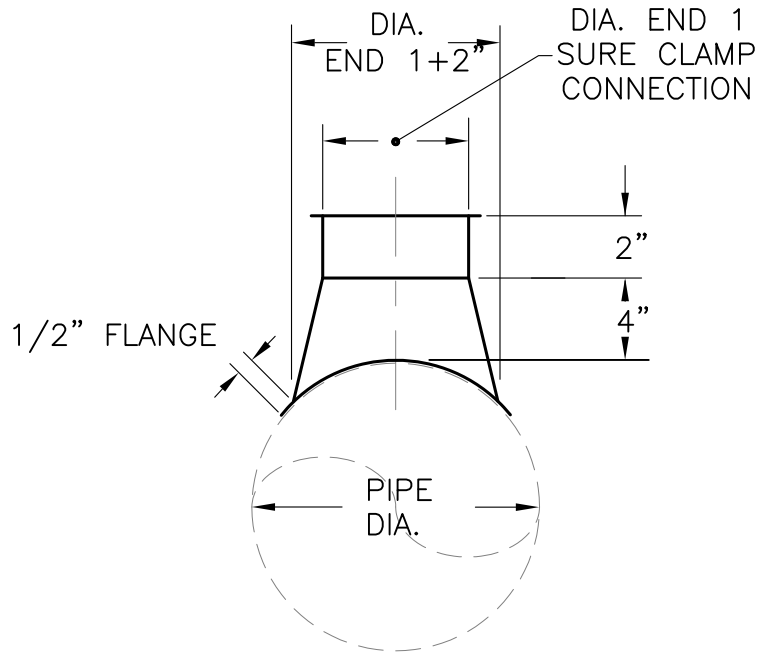

SYSTEM NUMBER/AREA : _____

MATERIAL : 16 GA. GALVANIZED

FABRICATE IN ACCORDANCE WITH
LANGDON'S DUCT CONSTRUCTION STANDARDS

TRANSVERSE JOINT
SURE CLAMP

LONGITUDINAL/TRANSVERSE SEAMS
ANSI/AWS D9.1–90 MIG WELDED (GMAW)

RL–4

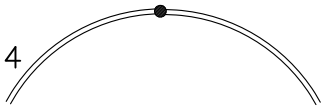

STANDARD SIZES 4"ø THRU 22"ø

TAG	QTY.	DIA. END 1	PIPE DIA.

www.langdonsheetmetal.com

Langdon, Inc. 9865 Wayne Avenue. Cincinnati, Ohio. 45215 Ph. 513–733–5955 Fax. 513–733–8050
The above mentioned product, is protected by patents and trade marks
copyright 2008 All Rights Reserved updated 12/17/12

SUBMITTAL
SURE • CLAMP 16 GA. GALVANIZED FITTINGS
(PATENTED)

#57T CONICAL TAP ON RECTANGULAR DUCTWORK

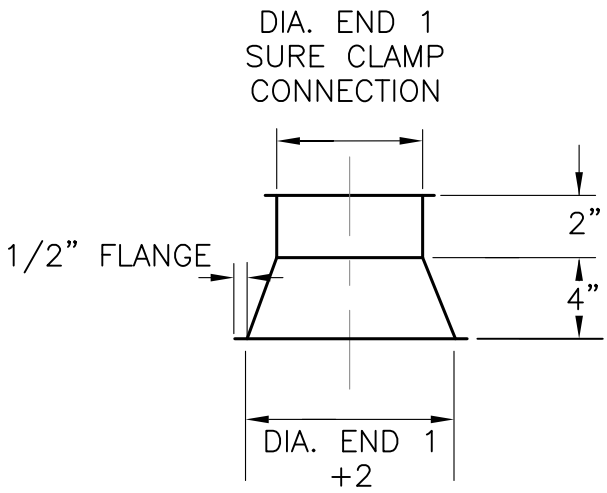

SYSTEM NUMBER/AREA : _____
MATERIAL : 16 GA. GALVANIZED

FABRICATE IN ACCORDANCE WITH
LANGDON'S DUCT CONSTRUCTION STANDARDS

TRANSVERSE JOINT
SURE CLAMP

LONGITUDINAL/TRANSVERSE SEAMS
ANSI/AWS D9.1–90 MIG WELDED (GMAW)

RL–4

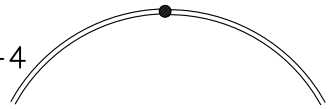

STANDARD SIZES 4"ø THRU 22"ø

TAG	QTY.	DIA. END 1

www.langdonsheetmetal.com

Langdon, Inc. 9865 Wayne Avenue. Cincinnati, Ohio. 45215 Ph. 513–733–5955 Fax. 513–733–8050
The above mentioned product, is protected by patents and trade marks
copyright 2008 All Rights Reserved updated 12/17/12

SUBMITTAL
SURE • CLAMP 16 GA. GALVANIZED FITTINGS
(PATENTED)

#100C EQUIPMENT COLLAR-(HOODS, AIR VALVES, ECT.)

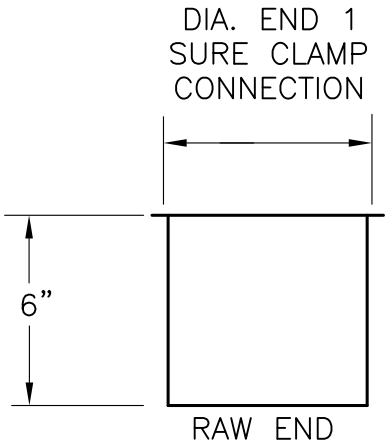

SYSTEM NUMBER/AREA : _____

MATERIAL : 16 GA. GALVANIZED

FABRICATE IN ACCORDANCE WITH
LANGDON'S DUCT CONSTRUCTION STANDARDS

TRANSVERSE JOINT
SURE CLAMP

LONGITUDINAL/TRANSVERSE SEAMS
ANSI/AWS D9.1-90 MIG WELDED (GMAW)

RL-4

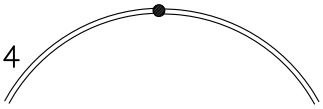

STANDARD SIZES 4"ø THRU 22"ø

TAG	QTY.	DIA. END 1

www.langdonsheetmetal.com

Langdon, Inc. 9865 Wayne Avenue. Cincinnati, Ohio. 45215 Ph. 513-733-5955 Fax. 513-733-8050

The above mentioned product, is protected by patents and trade marks
copyright 2008 All Rights Reserved updated 12/17/12

SUBMITTAL
SPIRAL FITTINGS

MANUAL VOLUME DAMPER 4"Ø TO 18"Ø

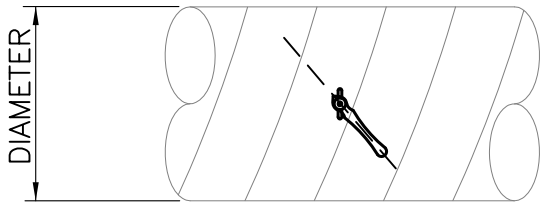

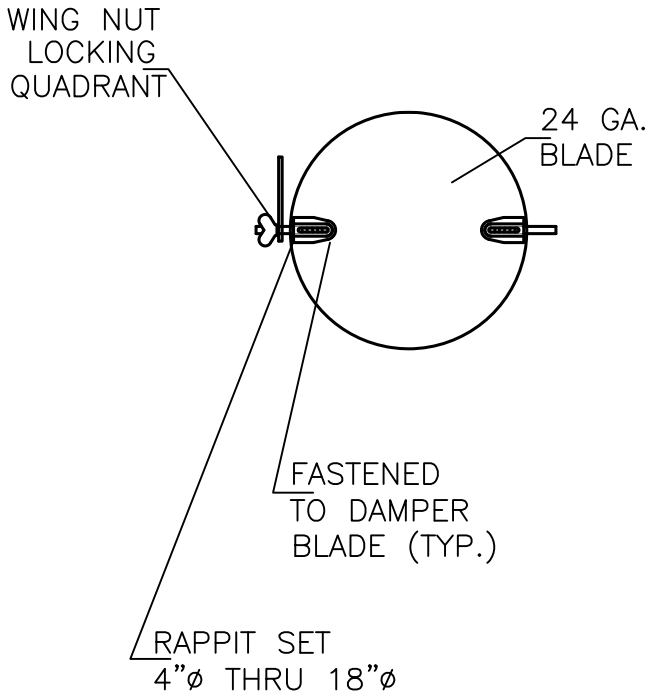

SYSTEM NUMBER/AREA : _____

MATERIAL/STATIC WG : _____

FABRICATE IN ACCORDANCE WITH
SMACNA DUCT CONSTRUCTION STANDARDS

TRANSVERSE JOINT

SMALL END SLIP CONNECTION

LONGITUDINAL SEAMS

LAP, SPOTWELD AND SEAL

RL–2

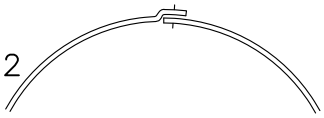

STANDARD SIZES 4"Ø THRU 18"Ø

TAG	QTY.	DIAMETER

www.langdonsheetmetal.com

Langdon, Inc. 9865 Wayne Avenue. Cincinnati, Ohio. 45215 Ph. 513–733–5955 Fax. 513–733–8050
All Rights Reserved updated 12/17/12

SUBMITTAL
SURE • CLAMP 16 GA. GALVANIZED FITTINGS
(PATENTED)

#100VD MANUAL VOLUME DAMPER 4"Ø TO 18"Ø

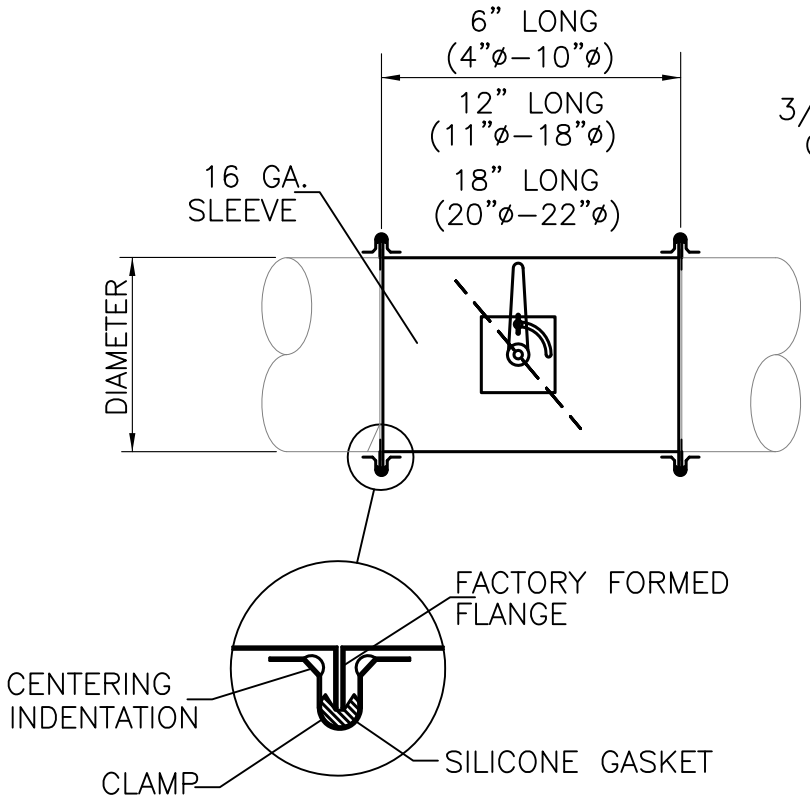

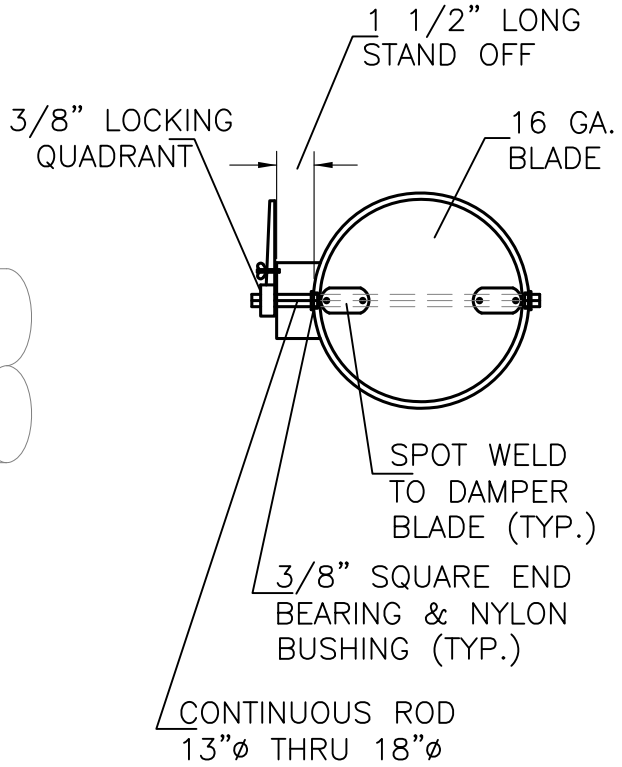

SYSTEM NUMBER/AREA : _____

MATERIAL : 16 GA. GALVANIZED

FABRICATE IN ACCORDANCE WITH
LANGDON'S DUCT CONSTRUCTION STANDARDS

TRANSVERSE JOINT

SURE CLAMP

LONGITUDINAL/TRANSVERSE SEAMS

ANSI/AWS D9.1–90 MIG WELDED (GMAW)

RL–4

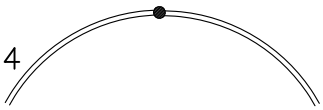

STANDARD SIZES 4"ø THRU 22"ø

TAG	QTY.	DIAMETER

www.langdonsheetmetal.com

Langdon, Inc. 9865 Wayne Avenue. Cincinnati, Ohio. 45215 Ph. 513–733–5955 Fax. 513–733–8050
The above mentioned product, is protected by patents and trade marks
copyright 2008 All Rights Reserved updated 12/17/12